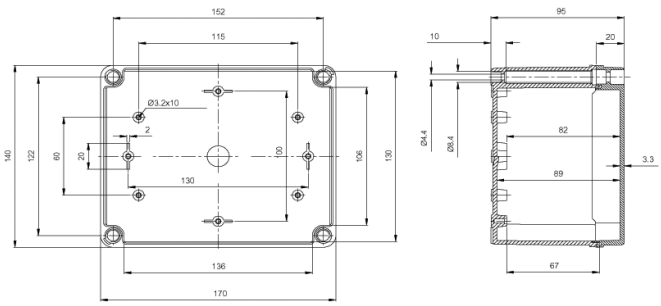

Product #: 8784015

Order Symbol: ABS H 95 T

Description: 6.7 x 5.5 x 3.7 inch polycarbonate enclosure with an transparent cover

Dimensions	Height	Width	Depth
Inch	6.7	5.5	3.7
mm	170	140	95

Materials	
Material:	ABS Plastic
Base color:	RAL 7035 -light grey
Cover color:	Transparent
Gasket material:	Polyurethane

Temperatures	
Temperature °F (short term):	-40 … 140
Temperature °F (continuous):	-40 … 140
Temperature °C (short term):	-40 … 60
Temperature °C (continuous):	-40 … 60

Ratings	
Ingress Protection (EN 60529):	IP66 / IP67
Impact Resistance (EN 62262):	IK07
Electrical insulation:	Totally insulated
Halogen free (DIN/VDE 0472, Part 815):	No
UV resistance:	UL 508
Flammability Rating:	UL 94-HB /UL 94-V0 cover
Glow Wire Test (IEC 60695):	960 °C