FIBOX
Enclosing innovations

WWW.FIBOXUSA.COM (888) 342-6987

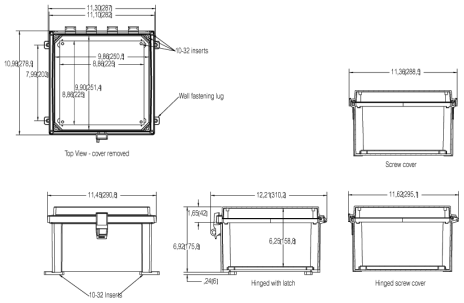

Product #: 8561111

Order Symbol: AR10106CHL

Description: Hinged opaque screw cover enclosure with plastic quick release latch.

Remarks: PC Enclosure, Hinged opaque screw cover w/Plastic quick release latch

Dimensions	Height	Width	Depth
Inch	10	10	6
mm	254	254	152.4

Materials	
Material:	Polycarbonate
Base color:	RAL 7035 -light grey
Cover color:	RAL 7035 -light grey
Gasket material:	Polyurethane

Temperatures	
Temperature °F (short term):	-40 … 250
Temperature °F (continuous):	-40 … 175
Temperature °C (short term):	-40 … 140
Temperature °C (continuous):	-40 … 80

Ratings	
Ingress Protection (EN 60529):	IP66; IP67;
Impact Resistance (EN 62262):	IK09;
Electrical insulation:	Fully insulated
Halogen free (DIN/VDE 0472, Part 815):	Yes
UV resistance:	UL 508
Flammability Rating:	UL94-5VA (f1)
Glow Wire Test (IEC 60695):	960 °C
UL/cUL Type:	NEMA 4, 4X, 6, 6P, 12, 12K and 13