FIBOX
Enclosing innovations

WWW.FIBOXUSA.COM (888) 342-6987

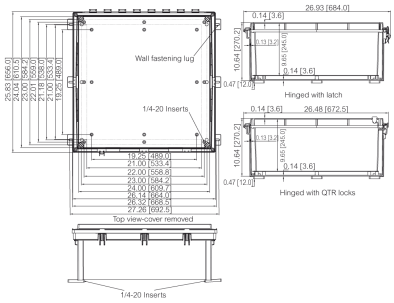

Product #: 8561390

Order Symbol: AR242410CHSS

Description: 24 x 24 x 10 Inch PC Enclosure, Hinged opaque screw cover w/S.S. Quick release latch

Remarks: PC Enclosure, Hinged opaque screw cover w/S.S. Quick release latch

Dimensions	Height	Width	Depth
Inch	24	24	10
mm	609.6	609.6	254

Materials	
Material:	Polycarbonate
Base color:	RAL 7035 -light grey
Cover color:	RAL 7035 -light grey
Gasket material:	Polyurethane

Temperatures	
Temperature °F (short term):	-40 … 250
Temperature °F (continuous):	-40 … 175
Temperature °C (short term):	-40 … 140
Temperature °C (continuous):	-40 … 80

Ratings	
Ingress Protection (EN 60529):	IP66; IP67;
Impact Resistance (EN 62262):	IK09;
Electrical insulation:	Fully insulated
Halogen free (DIN/VDE 0472, Part 815):	Yes
UV resistance:	UL 508
Flammability Rating:	UL94-5VA (f1)
Glow Wire Test (IEC 60695):	960 °C
UL/cUL Type:	4, 4X,12, 12K and 13: