FIBOX
Enclosing innovations

WWW.FIBOXUSA.COM (888) 342-6987

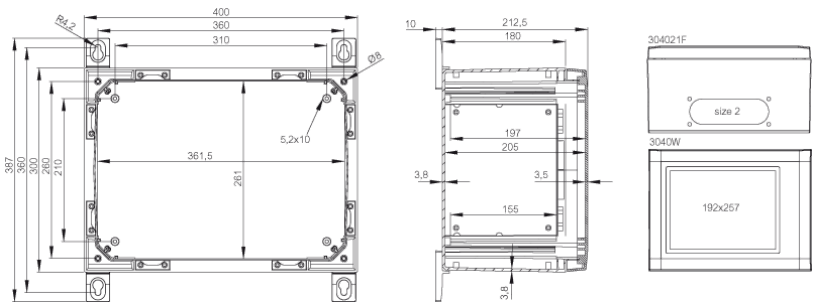

Product #: 8121023N
Order Symbol: ARCA 304021T No-MP
Description: Transparent hinged bit locking enclosure
Remarks: Transparent Cover, 2-point locking, hinges on the short side

Dimensions	Height	Width	Depth
Inch	11.81	15.75	8.27
mm	300	400	210

Materials	
Material:	Polycarbonate
Base color:	RAL 7035 -light grey
Cover color:	Transparent Grey
Gasket material:	Polyurethane (PUR)

Temperatures	
Temperature °F (short term):	: -40 … 250
Temperature °F (continuous):	-40 … 175
Temperature °C (short term):	-40 … 140
Temperature °C (continuous):	-40 … 80

Ratings	
Ingress Protection (EN 60529):	IP66
Impact Resistance (EN 62262):	IK10
Electrical insulation:	Totally Insulated
Halogen free (DIN/VDE 0472, Part 815):	Yes
UV resistance:	UL 508
Flammability Rating:	UL94-5VA (f1)
Glow Wire Test (IEC 60695):	960 °C
UL/cUL Type:	NEMA 1, 4, 4X, 12 and 13