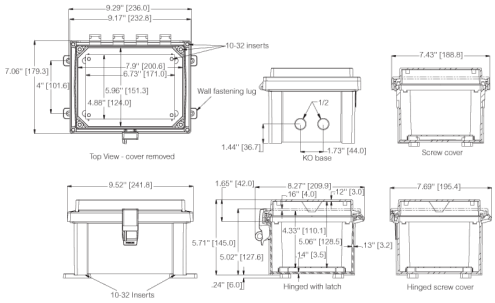

Product #: 8561432

Order Symbol: ARK865CHSSL

Description: 8 x 6 x 5 with knockouts, hinged opaque cover, SS latch, padlockable

Remarks: PC Enclosure with Knock-Out Base, Opaque Hinged Latch Cover

Dimensions	Height	Width	Depth
Inch	8	6	5
mm	203.2	152.4	127

Materials	
Material:	Polycarbonate
Base color:	RAL 7035 -light grey
Cover color:	RAL 7035 -light grey
Gasket material:	Polyurethane

Temperatures	
Temperature °F (short term):	-40 … 250
Temperature °F (continuous):	-40 … 175
Temperature °C (short term):	-40 … 140
Temperature °C (continuous):	-40 … 80

Ratings	
Ingress Protection (EN 60529):	IP66; IP67
Impact Resistance (EN 62262):	IK09
Electrical insulation:	Fully insulated
Halogen free (DIN/VDE 0472, Part 815):	Yes
UV resistance:	UL 508
Flammability Rating:	UL94-5VA (f1)
Glow Wire Test (IEC 60695):	960 °C
UL/cUL Type:	NEMA 4, 4X, 6, 6P, 12, 12K and 13