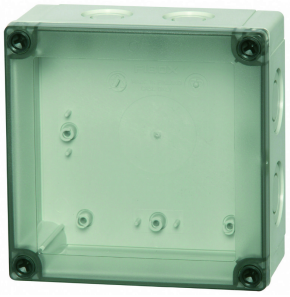

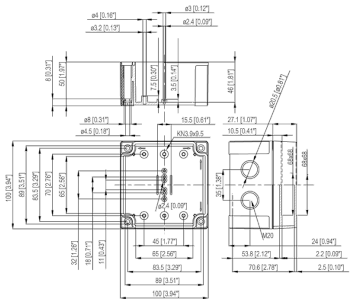

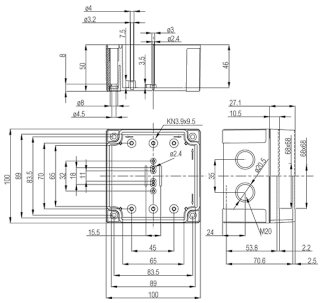

Product #: 6416932
Order Symbol: UL PCM 95/75 T
Description: Transparent screw cover enclosure with knock-out base
Remarks: Smoked Cover

Dimensions	Height	Width	Depth
Inch	3.9	3.9	3
mm	100	100	75

Materials	
Material:	Polycarbonate
Base color:	RAL 7035 -light grey
Cover color:	Transparent Grey
Gasket material:	Polyurethane

Temperatures	
Temperature °F (short term):	-40 … 250
Temperature °F (continuous):	-40 … 175
Temperature °C (short term):	-40 … 140
Temperature °C (continuous):	-40 … 80

Ratings	
Ingress Protection (EN 60529):	IP66; IP67
Impact Resistance (EN 62262):	IK08
Electrical insulation:	Totally insulated
Halogen free (DIN/VDE 0472, Part 815):	No
UV resistance:	UL 508
Flammability Rating:	UL94-5VA (f1)/ Cover: UL94-V0 (f1)
Glow Wire Test (IEC 60695):	960 °C
UL/cUL Type:	1, 4, 4x and 6;